MC Fundamentals Task Sheet

Excavator Operation

Depth Automatics

Learning Objective 2
Workflow Overview 2

© 2018, Trimble Navigation Limited. All rights reserved. Trimble and the Globe & Triangle logo are trademarks of Trimble Navigation Limited registered in the United States and in other countries. All other trademarks are the property of their respective owners.

Learning Objective

At the end of this guide, you will be able to engage Excavator Depth Automatics and operate the system using this feature to design. The learner will also be familiar with Autos Optimization and how an operator can optimize a machine to operate in different material types.

Workflow Overview

- 3D Excavator is in Design Mode
- The correct design file has been selected

Once you have confirmed the above, apply the settings

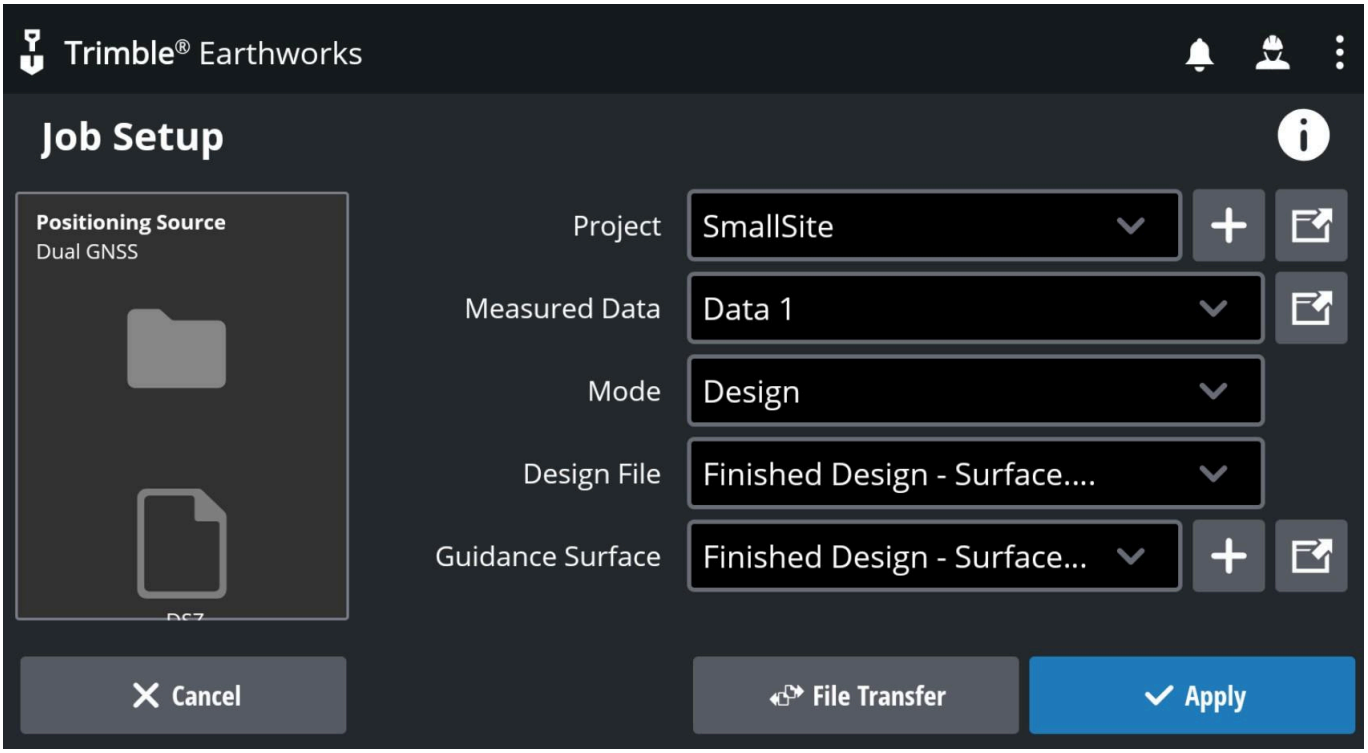

1. After selecting the needed design, Select the start button.

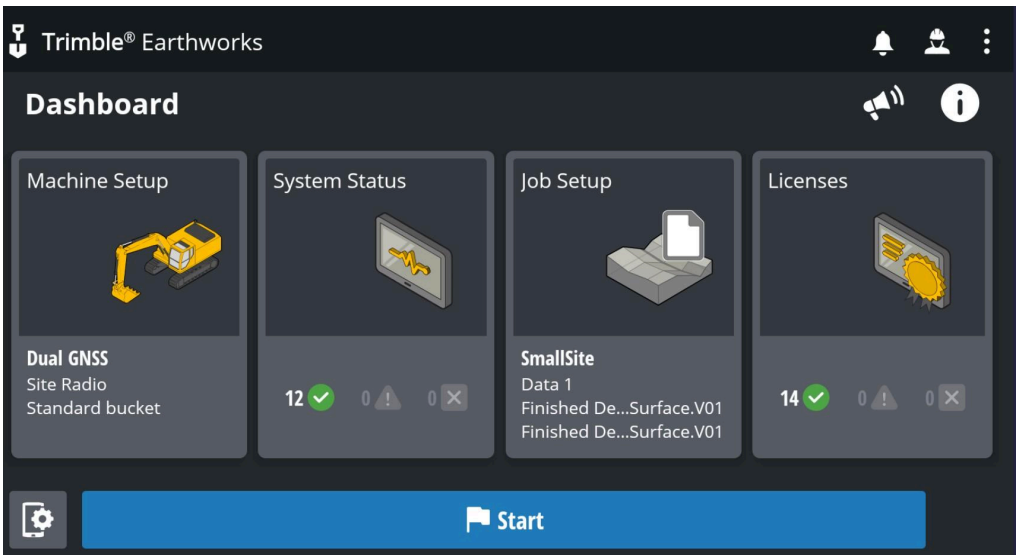

2. Automatics must be armed to function and default into an unarmed state. To enable automatics, Hold the Autos button to access Autos Setup. Autos Setup can also be accessed via the Work Settings menu if desired:

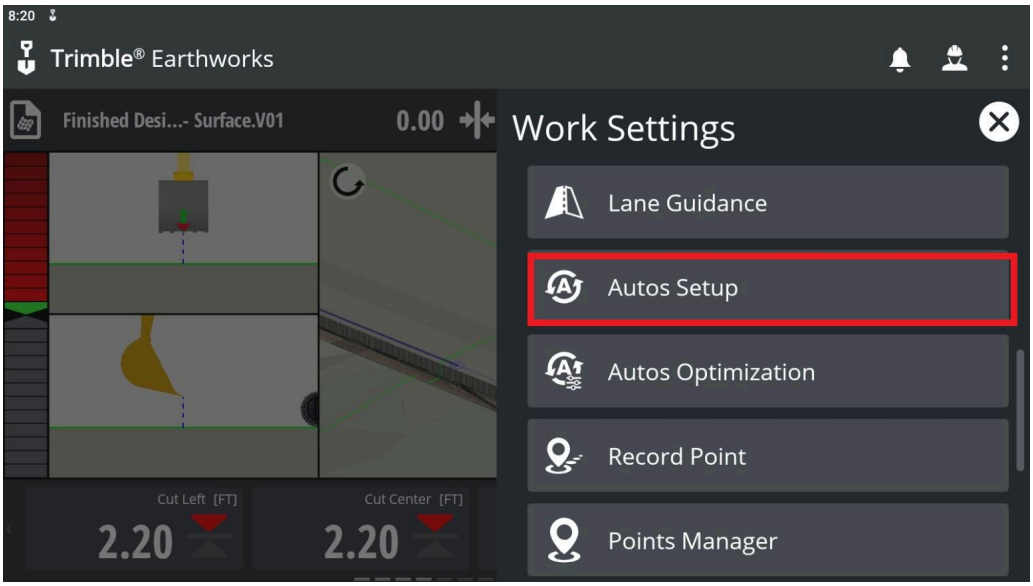

3. Once inside the Autos setup menu, select the slider to arm automatics and select Apply.

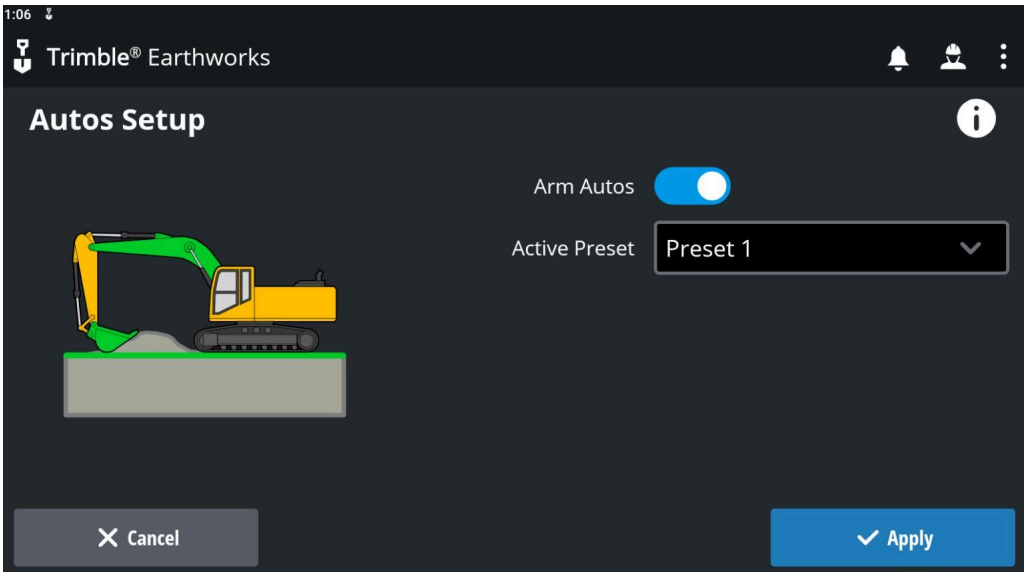

4. Automatic control of the excavator must be confirmed once armed. This is accomplished by holding the automatics switch for 1 second once prompted. Automatics will be armed once the button is released.

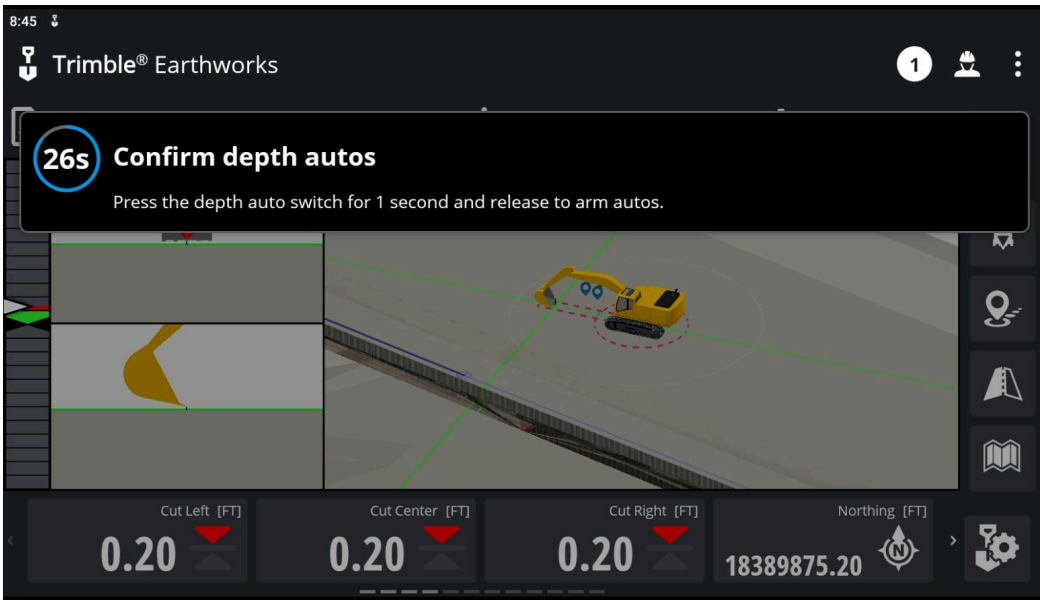

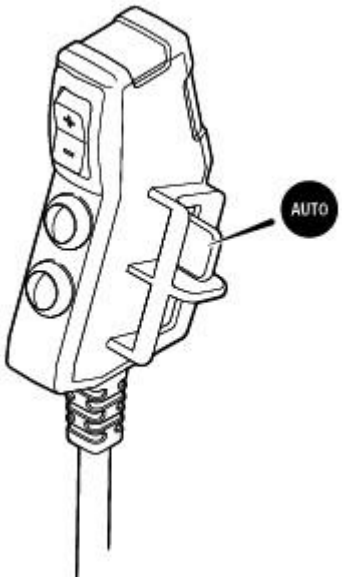

5. Depth Autos performs best when grading a finish surface. After you finish bulk excavating and approach final grade, engage Autos. The system automatically controls movement of the boom and attachment, while you manually control movement of the stick.
6. Position the machine on solid, stable ground to prevent rocking.
7. Make sure the machine's hydraulic oil reaches its normal operating temperature.
8. Select High Power mode and turn the throttle up to maximum revs.
9. Engage Autos: Press and hold the depth auto switch as the attachment cutting edge approaches the design elevation. Move the stick lever slowly to start the automatic movement of the boom and attachment. Once Depth Autos engage and the boom and attachment are in motion, you can increase the velocity of the stick.

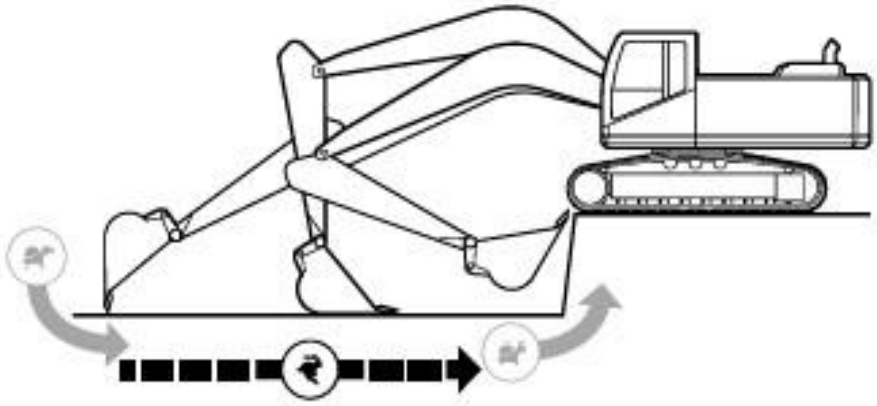

Note- The Focus Point must be within 1 foot or .3 meters from the design surface to engage automatics

10. Once Depth Autos is enabled by holding the Auto button, the status indicator on the run screen will change to indicate Automatics are currently engaged. This icon can indicate several different status messages.

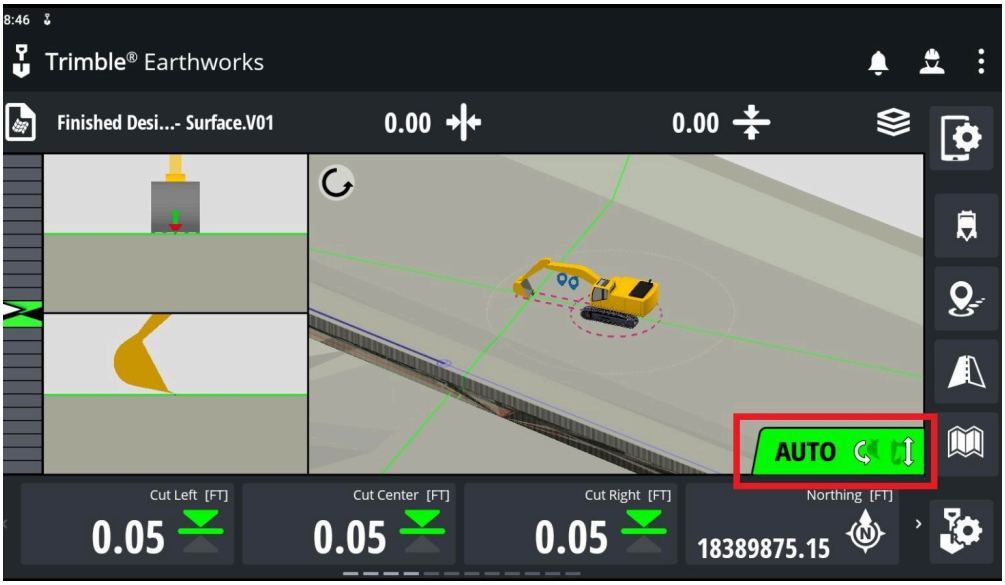

Status Indicator	Status
MANUAL	*Manual* Depth Autos is armed, but not engaged.
MANUAL	*Manual Interlock* Depth Autos is armed but cannot be engaged. Possible reasons: Hydraulic lockout engaged, valve module failure.
AUTO	*Depth Autos ready* Depth Autos is armed and engaged, but is not active because the attachment is outside the control range.

Status Indicator	Status
AUTO	*Depth Autos engaged* Depth Autos is armed, engaged and active with the attachment inside the control range. In this state the system controls movement of the boom and attachment.
AUTO	*Depth Autos not ready* Depth Autos is armed and engaged but cannot be active so Autos is temporarily suspended. Possible reason: GNSS precision is outside tolerance.

Autos Optimization

You may need to adjust the Autos Optimization settings when, for example, you work with a different type of material (such as sand, dirt, or gravel).

Adjusting the settings in the Autos Optimization screen may improve the performance of Autos. For example, if the boom is overshooting above the target design grade when you pull in the stick, you can decrease the Boom Raise speed.

Autos performance is dependent on the speed that you pull in the stick. Experiment with different speeds to find the optimum for your machine and combination of attachment and material. For example:

- A slower or faster speed may produce a better result.
- A smooth take off speed helps.
- Do not vary the speed while optimizing the sliders.

1. From the run screen, access the Work Settings menu and select the Autos Optimization menu.

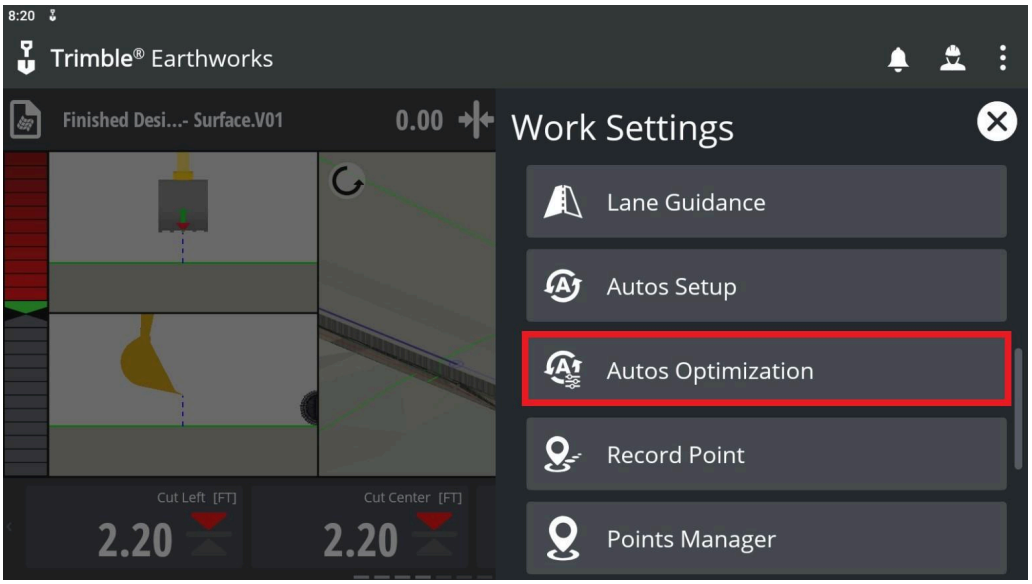

2. Once in the Autos Optimization screen, several different settings can be interacted with by the use of sliders

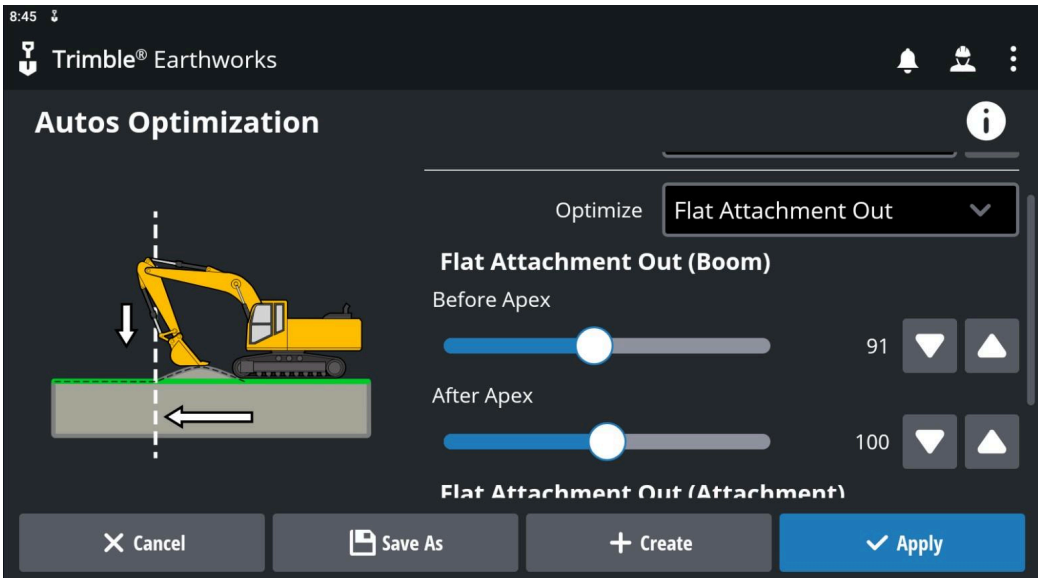

3. Select High Power mode and turn the throttle up to maximum revs.
4. Using Depth Autos, make a test pass in the material you are working, so that you can judge the current performance of Autos.
5. Place the attachment on grade at near full reach.
6. Engage Autos and make a pass. Watch how quickly or slowly the attachment moves to the on-grade position.

Note – The behavior of Autos when the attachment is not loaded with the same material you will work with does not provide enough information to adjust the values in the Autos Optimization screen. Always use this information in conjunction with the results of a test Pass.

7. To make any changes, in the Autos Optimization screen, select the appropriate type from the Optimize drop-down list.
8. Move the slider(s) to increase or decrease the values to adjust performance as needed.

Note: It is important to remember which positions of the pass will be adjusted by the parameter being changed.

TIP – The apex is where the boom changes from raising to lowering during a pass.

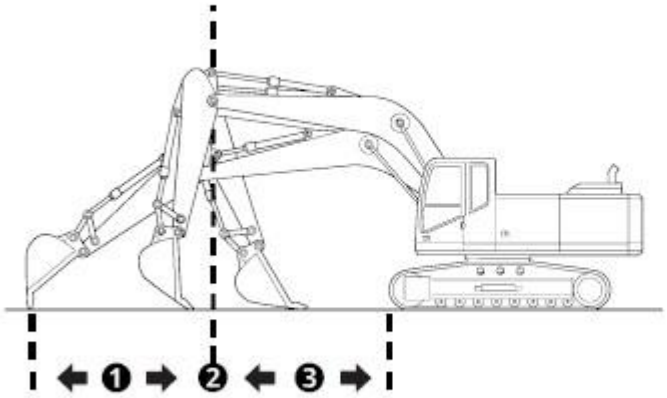

❶ Full reach to apex ❷ Apex ❸ Apex to fully crowded

9. For the purpose of this exercise, make large changes to the sliders and observe the differences in operation when the settings are changed.
10. The Autos Optimization settings will have differing effects upon the performance of the machine. Adjust as needed until performance meets customer expectations:

Type	Option	Description
Attack Angle	**Attack Angle**	If required, move the Attack Angle slider to change the angle of the bottom of the attachment to the design surface . Zero is parallel, a negative value will lower the back of the attachment and a positive value will raise the back of the attachment.
Rake	**Rake In Before Apex**	If the finished surface is below grade when you perform a Rake In pass from full reach to the apex, increase this value.
	Rake in After Apex	If the finished surface is below grade when you perform a Rake In pass from apex to fully crowded, increase this value.
	Rake Out Before Apex	If the finished surface is below grade when you perform a Rake Out pass from fully crowded to the apex, increase this value.
	Rake Out After Apex	If the finished surface is below grade when you perform a Rake Out pass from the apex to full reach, increase this value.

Type	Option	Description
Flat Attachment In	**Flat Attachment In (Boom) Before Apex**	If the finished surface is below grade when you perform a Flat Attachment In pass from full reach to the apex, increase this value. This will control the boom raise and lower commands.
	Flat Attachment In (Boom) After Apex	If the finished surface is below grade when you perform a Flat Attachment In pass from the apex to fully crowded, increase this value. This will control the boom raise and lower commands.
	Flat Attachment In (Attachment) Before Apex	If the attachment changes angle too slowly and does not keep flat on grade when you perform a Flat Attachment In pass from full reach to the apex, increase this value.
	Flat Attachment In (Attachment) After Apex	If the attachment changes angle too slowly and does not keep flat on grade when you perform a Flat Attachment In pass from the apex to fully crowded, increase this value.
Flat Attachment Out	**Flat Attachment Out (Boom) Before Apex**	If the finished surface is below grade when you perform a Flat Attachment Out pass from fully crowded to the apex, increase this value. This will control the boom raise and lower commands.
	Flat Attachment Out (Boom) After Apex	If the attachment changes angle too slowly and does not keep flat on grade when you perform a Flat Attachment Out pass from the apex to full reach, increase this value. This will control the boom raise and lower commands.
	Flat Attachment Out (Attachment) Before Apex	If the attachment changes angle too slowly and does not keep flat on grade when you perform a Flat Attachment Out pass from fully crowded to the apex, increase this value.
	Flat Attachment Out (Attachment) After Apex	If the attachment changes angle too slowly and does not keep flat on grade when you perform a Flat Attachment Out pass from the apex to full reach, increase this value.

Type	Option	Description
Boom	**Raise Speed**	Looking at the surface from full reach to the apex, use Boom Raise Speed to make the attachment cut to grade. If the finished surface is consistently below grade, increase this value.
	Raise Response	If the boom is slow to rise, then increase this value.
	Lower Speed	Looking at the surface from the apex to fully crowded, use Boom Lower Speed to make the attachment cut to grade. If the finished surface is consistently above grade, increase this value.
	Lower Response	If the boom is slow to lower, then increase this value.
	Take Off Speed	If the boom is not driving to grade within the first 0.5 m/1.5 ft after the stick is pulled, increase this value. Decreasing this value may reduce oscillations at the very beginning of the pass.
Joystick	**Joystick Response Speed**	If both the boom and attachment are slow to respond to stick movement, increase this value. Decreasing this value may reduce oscillations at the very beginning of the pass and oscillations observed when the stick movement is slow.
Attachment	**Dump Speed**	If the attachment is slow to dump for the full duration of the pass, increase this value.
	Dump Response	If the attachment is slow to dump, then increase this value.
	Curl Speed	If the attachment is slow to curl for the full duration of the pass, increase this value.
	Curl Response	If the attachment is slow to curl, then increase this value.

Note: Performance in Automatics can vary machine model to model. Trimble has published a number of Best Practices guides for specific machine models that are available on Community. These documents cover performance quirks or differences that may not be expected and outline the best methods for operating these machines using Trimble automatic control.